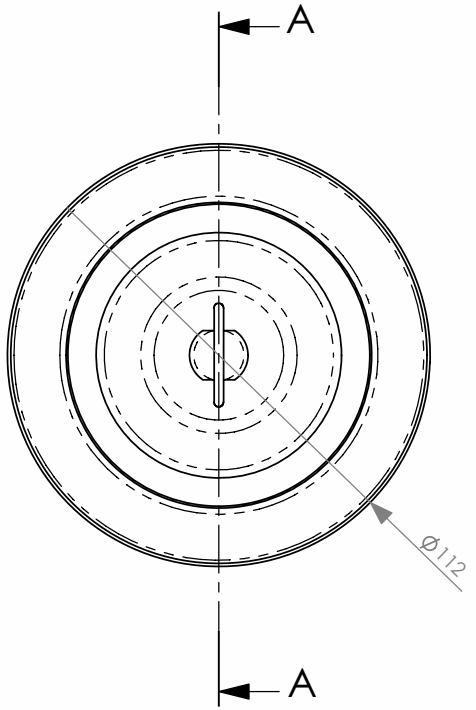

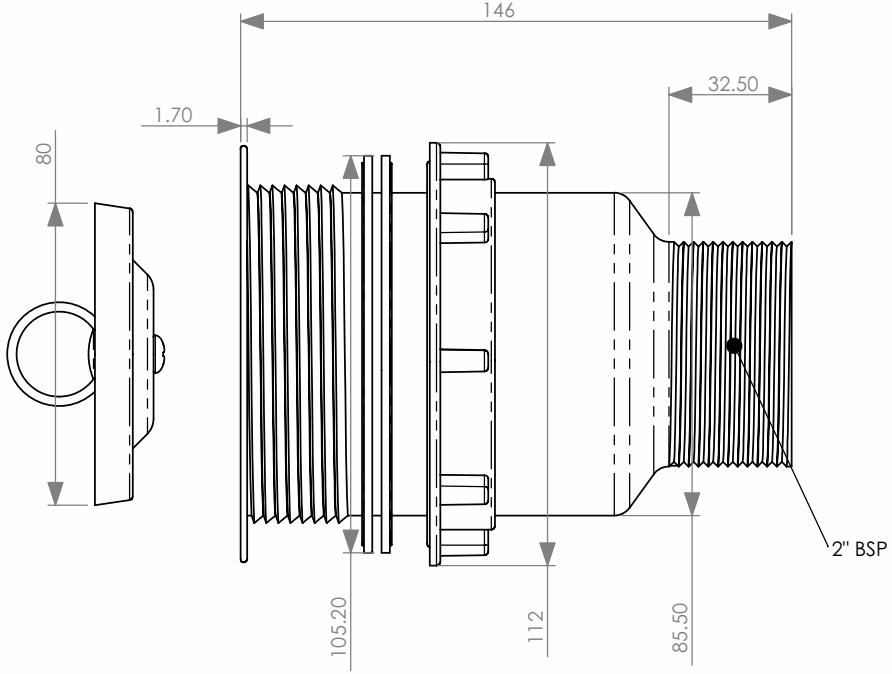

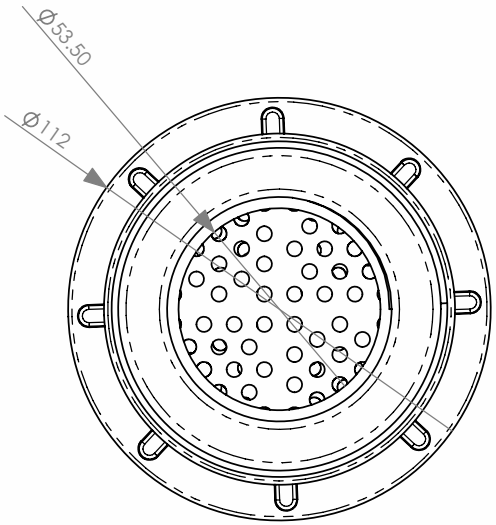

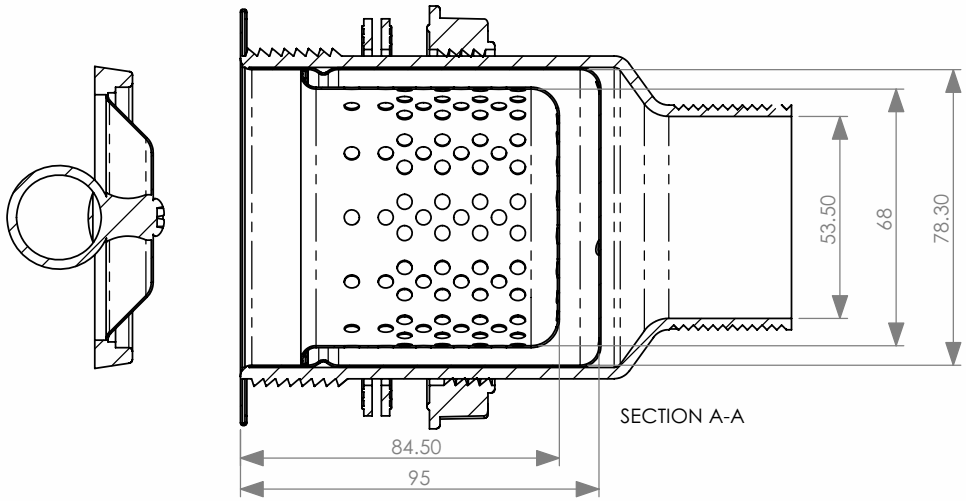

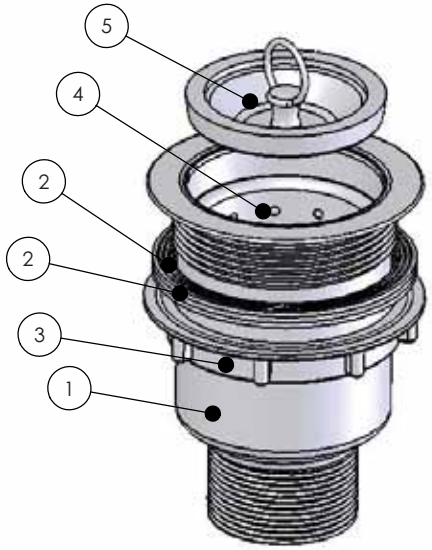

ITEM		
1	DRAIN BODY	304 S-STEEL/PVC
2	FLANGE SEAL	NATURAL RUBBER
3	FLANGE	PVC
4	BASKET	304 S-STEEL
5	PLUG	304 S-STEEL/PVC

DATE	ISSUE	DRAWN	DESCRIPTION
21/12/06	A	LJB	DESCRIPTION

DO NOT SCALE
DIMENSIONS IN MILLIMETERS

UNLESS OTHERWISE STATED

1:2
SCALE

3RD ANGLE
PROJECTION

SSBW COMMERCIAL SINK BASKET ARRESTOR
DRAWING

1/1
SHEET

A4

CLUB STAINLESS
and Accessories

Unit 6/24 Wellington St RIVERSTONE NSW 2765, Australia
T 61 02 9627 6111
F 61 02 9627 3111
E brett@clubstainless.com.au

This drawing and the design it covers are the property of CLUB STAINLESS PTY. LTD. And all information which it contains is confidential.
This drawing must not be reproduced or disclosed, nor must any information taken therefrombe disclosed without prior consent inwriting from AVANTECH PTY. LTD.