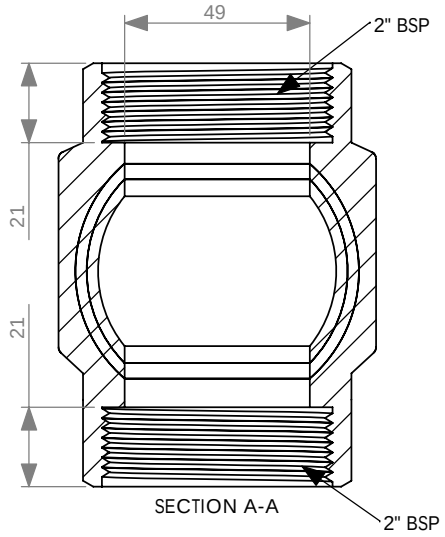

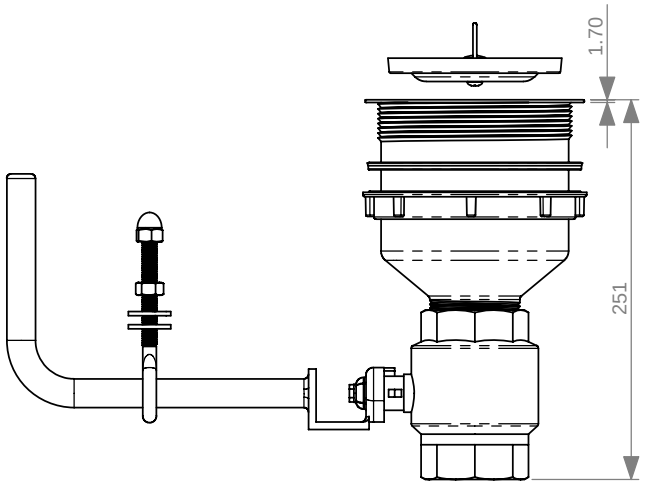

BALL VALVE FITTED WITH SSBW-1 DRY BASKET ARRESTOR

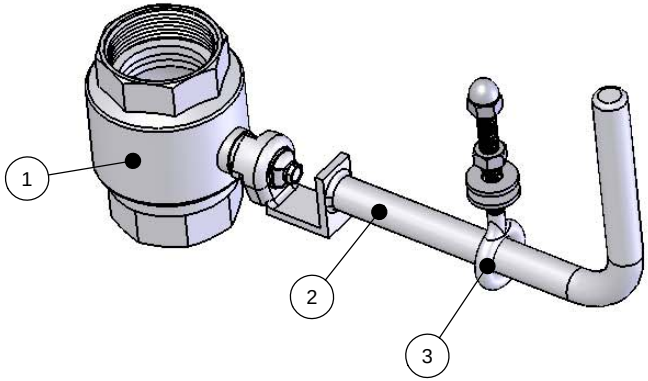

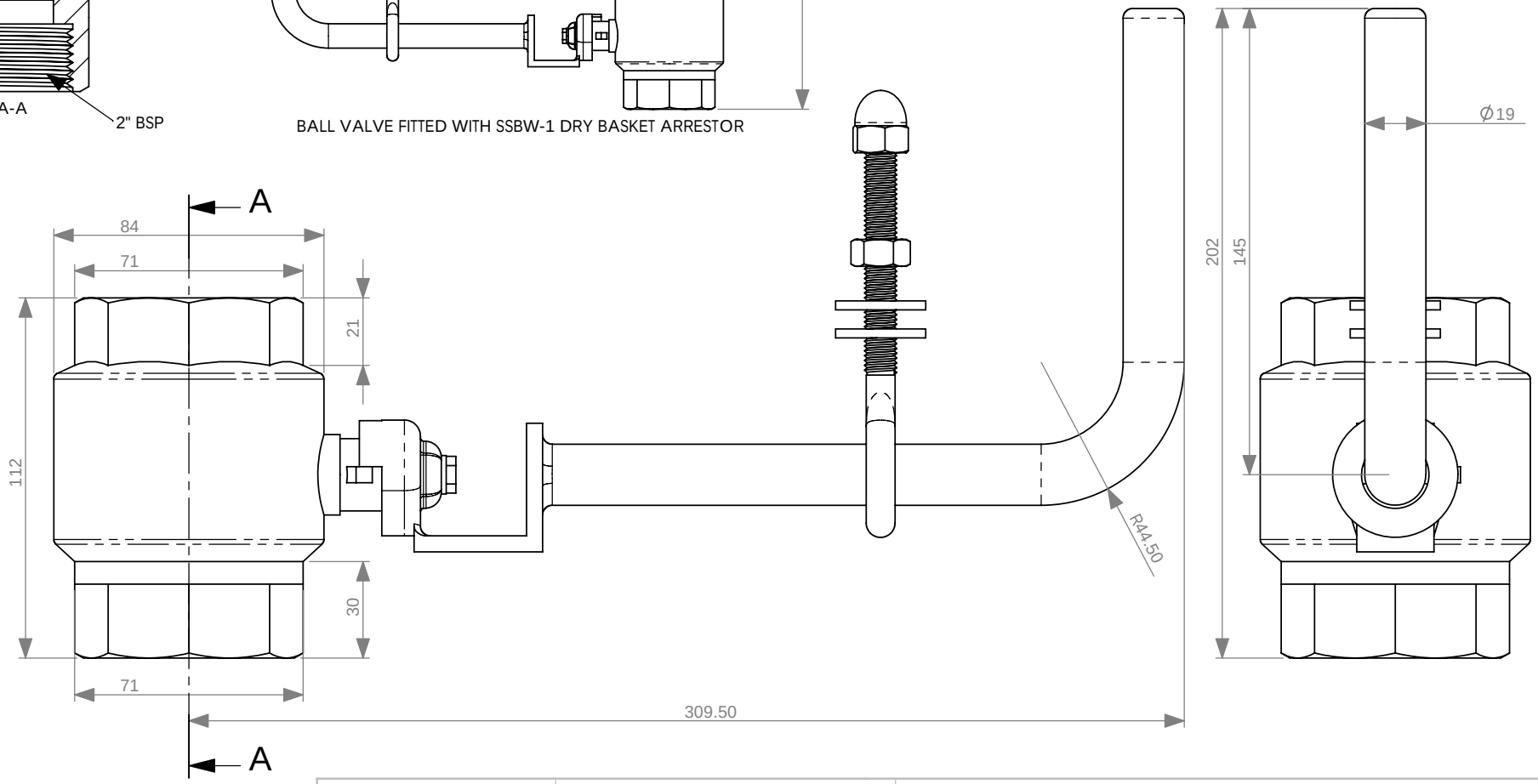

ITEM	
1	BALL VALVE
2	HANDLE
3	EYE BOLT

DATE	ISSUE	DRAWN	DESCRIPTION
21/12/06	A	LJB	DESCRIPTION

DO NOT SCALE
DIMENSIONS IN MILLIMETERS

UNLESS OTHERWISE STATED

1:2
SCALE

3RD ANGLE
PROJECTION

SSBV-H
DRAWING

BALL VALVE AND HANDLE

1/1
SHEET

A4

CLUB STAINLESS
and Accessories

Unit 2/19 Curtis Rd. Mulgrave, NSW 2756, Australia
T 61 2 4587 9887
F 61 2 4587 9886
E brett@clubstainless.com.au

This drawing and the design it covers are the property of CLUB STAINLESS PTY. LTD. And all information which it contains is confidential.
This drawing must not be reproduced or disclosed, nor must any information taken therefrombe disclosed without prior consent in writing from AVANTECH PTY. LTD.